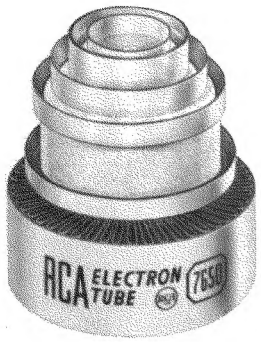

CERMOLOX®
Ruggedized
Matrix-Type Cathode
Forced-Air Cooled
800 Watts CW Power Output at 400 Mc
680 Watts PEP Output at 30 Mc

7650
BEAM POWER TUBE

RCA-7650 is a small, forced-air cooled uhf beam power tube designed for applications where dependable performance under severe shock and vibration is essential. It is intended for use in compact aircraft, mobile and stationary equipment. It is rated as an af power amplifier and modulator and to frequencies up to 1215 Mc as a linear rf power amplifier in single-sideband suppressed-carrier service, as a plate-modulated rf power amplifier in Class C telephony service, as an rf power amplifier and oscillator in Class C telegraphy service, and as an rf power amplifier in Class C FM telephony service.

The 7650 and variants of its basic design may also be useful in applications such as frequency multipliers, linear rf power amplifiers (AM or television), pulse modulators, pulsed-rf amplifiers, regulators, or other special services. Variations in cooling structure or other parameters are also possible. For information on variants, contact your RCA field representative, the nearest District Sales Office, or Manager, Power Tube Marketing, RCA, Lancaster, Pa.

The 7650 features the Cermolox construction, a unipotential cathode of the oxide-coated matrix type, and an integral louvered-fin radiator. In addition, it contains an axial ceramic pin which rigidly holds grid No.1, grid No.2, and cathode in fixed positions with respect to each other. Details of these features are described in the **Application Guide for RCA Power Tubes, ICE-300***.

INDEX

		page
I.	DESCRIPTION	
	General Data	1
	Ratings	2,3
	Footnotes	3
	Characteristics Range Values	3
	Special Performance Data	4
	Dimensional Outline	4
	Terminal Diagram	4
II.	CHARACTERISTICS	
	Cavity Tuning Curves	5
	Constant-Current Curves	6,7
	Cooling	8
	Mounting	8
III.	GENERAL APPLICATIONS	

* This bulletin is to be used in conjunction with the publication **Application Guide for RCA Power Tubes, ICE-300.** For a copy, write RCA, Commercial Engineering, Harrison, N. J.

GENERAL DATA

Electrical:

Heater for Matrix-Type Oxide-Coated Unipotential Cathode:		
Voltage (ac or dc)	6.3 typical 6.9 max.	volts volts
Current at 6.3 volts	7.5	amp
Minimum heating time	2	minutes

See further information on the heater in **Application Guide for RCA Power Tubes, ICE-300;** *Section V.A.3,* **Filament or Heater.**

Mu-Factor, Grid No.2 to Grid No.1	13	
Direct Interelectrode Capacitances[a]:		
Grid No.1 to plate	0.11 max.	pf
Grid No.1 to cathode & heater	28	pf
Plate to cathode & heater	0.011 max.	pf
Grid No.1 to grid No.2	38	pf
Grid No.2 to plate	5.5	pf
Grid No.2 to cathode & heater	1.1 max.	pf

Mechanical:

Operating Position	Any
Overall Length	2.40" max.
Greatest Diameter	2.09" max.
Terminal Connections	See *Dimensional Outline*
Radiator	Integral part of tube
Weight (Approx.)	3/4 lb

Thermal:

Terminal Temperature (Plate, grid No.2, grid No.1, cathode, and heater)	250 max.	°C
Plate-Core Temperature	250 max.	°C

See Dimensional Outline for temperature-measurement points

Information furnished by RCA is believed to be accurate and reliable. However, no responsibility is assumed by RCA for its use; nor for any infringements of patents or other rights of third parties which may result from its use. No license is granted by implication or otherwise under any patent or patent rights of RCA.

RADIO CORPORATION OF AMERICA
Electronic Components and Devices

Trademark(s) ® Registered
Marca(s) Registrada(s)

7650 7-64
Supersedes 7650 2-60
Printed in U.S.A.

AF POWER AMPLIFIER & MODULATOR[b]

Maximum CCS Ratings, *Absolute-Maximum Values:*

DC PLATE VOLTAGE	3000 max.	volts
DC GRID-No.2 VOLTAGE	1200 max.	volts
MAX.-SIGNAL DC PLATE CURRENT	500 max.	ma
MAX.-SIGNAL GRID-No.1 CURRENT	100 max.	ma
MAX.-SIGNAL GRID-No.2 INPUT	25 max.	watts
PLATE DISSIPATION	600 max.	watts

Maximum Circuit Values:

Grid-No.1 Circuit Resistance Under Any Condition:		
With fixed bias	15,000 max.	ohms
With cathode bias	Not Recommended	

Typical CCS Operation:

Values are for 2 tubes

DC Plate Voltage	2700	3000	volts
DC Grid-No.2 Voltage	450	450	volts
DC Grid-No.1 Voltage: From fixed-bias source	-40	-40	volts
Peak AF Grid-No.1-to-Grid-No.1 Voltage	80	80	volts
Zero-Signal DC Plate Current	200	200	ma
Max.-Signal DC Plate Current	900	1000	ma
Zero-Signal DC Grid-No.2 Current	0	0	ma
Max.-Signal DC Grid-No.2 Current	6	5	ma
Effective Load Resistance (Plate to plate)	6000	6400	ohms
Max.-Signal Driving Power (Approx.)	0	0	watts
Max.-Signal Power Output (Approx.)	1400	1600	watts

LINEAR RF POWER AMPLIFIER, CLASS AB1[b]
Single-Sideband Suppressed-Carrier Service

Peak envelope conditions for a signal having a minimum peak-to-average power ratio of 2

Maximum CCS Ratings, *Absolute-Maximum Values:*

	Up to 1215 Mc	
DC PLATE VOLTAGE	2500 max.	volts
DC GRID-No.2 VOLTAGE	1200 max.	volts
DC PLATE CURRENT AT PEAK OF ENVELOPE	700[c] max.	amp
PLATE DISSIPATION	600 max.	volts

Maximum Circuit Values:

Grid-No.1 Circuit Resistance Under Any Condition:		
With fixed bias	15,000 max.	ohms
With fixed bias (in Class AB1 operation)	50,000 max.	ohms
With cathode bias	Not recommended	
Grid-No.2 Circuit Impedance	*See Note* **d**	
Plate Circuit Impedance	*See Note* **e**	

Typical CCS Operation with "Two-Tone Modulation":

	at 30 Mc		
DC Plate Voltage	2250	2500	volts
DC Grid-No.2 Voltage	450	450	volts
DC Grid-No.1 Voltage	-37	-37	volts
Zero-Signal DC Plate Current	160	160	ma
Effective RF Load Resistance	2500	2700	ohms
DC Plate Current at Peak of Envelope	450	500	ma
Average DC Plate Current	315	350	ma
DC Grid-No.2 Current at Peak of Envelope	3	4	ma
Average DC Grid-No.2 Current	1.8	2.5	ma
Average DC Grid-No.1 Current	0.005	0.05	ma
Peak Envelope Driver Power Output (Approx.)	1	1	watt
Output-Circuit Efficiency (Approx.)	90	90	%
Distortion Products Level:			
Third order	-31	-31	db
Fifth order	-36	-36	db
Useful Power Output (Approx.)			
Average	290	340	watts
Peak envelope	580	680	watts

PLATE-MODULATED RF POWER AMPLIFIER – Class C Telephony[b]

Carrier conditions per tube for use with max. modulation factor of 1.0

Maximum CCS Ratings, *Absolute Values:*

	Up to 1215 Mc	
DC PLATE VOLTAGE	2000 max.	volts
DC GRID-No.2 VOLTAGE	1200 max.	volts
DC GRID-No.1 VOLTAGE	-250 max.	volts
DC PLATE CURRENT	500 max.	ma
DC GRID-No.1 CURRENT	100 max.	ma
PLATE INPUT	1000 max.	watts
GRID-No.2 INPUT	17 max.	watts
PLATE DISSIPATION	400 max.	watts

Maximum Circuit Values:

Grid-No.1-Circuit Resistance:		
Under any condition	15,000 max.	ohms

Typical CCS Operation in Cathode-Drive Circuit at 400 Mc:

DC Plate Voltage	1800	2000	volts
DC Grid-No.2 Voltage	400	400	volts
DC Grid-No.1 Voltage	-45	-35	volts
DC Plate Current	450	500	ma
DC Grid-No.2 Current	6	8	ma
DC Grid-No.1 Current (Approx.)	15	12	ma
Output Circuit Efficiency (Approx.)	80	80	%
Driver Power Output (Approx.)	35	35	watts
Useful Power Output (Approx.)	500	600	watts

RF POWER AMPLIFIER & OSC.--Class C Telegraphy[b] and RF POWER AMPLIFIER--Class C FM Telephony[b]

Maximum CCS Ratings, *Absolute Values:*

	Up to 1215 Mc	
DC PLATE VOLTAGE	2500 max.	volts
DC GRID-No.2 VOLTAGE	1200 max.	volts
DC GRID-No.1 VOLTAGE	-250 max.	volts
DC PLATE CURRENT	500 max.	ma
DC GRID-No.1 CURRENT	100 max.	ma
PLATE INPUT	1250 max.	watts
GRID-No.2 INPUT	25 max.	watts
PLATE DISSIPATION	700 max.	watts

Maximum Circuit Values:

Grid-No.1-Circuit Resistance:		
Under any condition	15,000 max.	ohms

Typical CCS Operation in Cathode-Drive Circuit at 400 Mc:

DC Plate Voltage	2250	2500	volts
DC Grid-No.2 Voltage	400	400	volts
DC Grid-No.1 Voltage	-45	-35	volts
DC Plate Current	450	500	ma
DC Grid-No.2 Current	7	8	ma
DC Grid-No.1 Current (Approx.)	10	12	ma
Output Circuit Efficiency (Approx.)	80	80	%
Driver Power Output (Approx.)	30	35	watts
Useful Power Output (Approx.)	650	800	watts

Typical CCS Operation in Cathode-Drive Circuit at 1215 Mc:

DC Plate Voltage	2500	volts
DC Grid-No.2 Voltage	400	volts
DC Grid-No.1 Voltage	-50	volts
DC Plate Current	500	ma
DC Grid-No.2 Current	6	ma
DC Grid-No.1 Current	10	ma
Output Circuit Efficiency (Approx.)	70	%
Driver Power Output (Approx.)	80	watts
Useful Power Output (Approx.)	375	watts

FOOTNOTES

[a] Measured with special shield adapter.

[b] See Section V.C. of 1CE-300.

[c] The maximum rating for a signal having a minimum peak-to-average power ratio less than 2, such as is obtained in "Single-Tone" operation, is 500 ma. During short periods of circuit adjustment under "Single-Tone" conditions, the average plate current may be as high as 700 ma.

[d] See Section V.B.2 of 1CE-300.

[e] See Section V.B.1 of 1CE-300.

CHARACTERISTICS RANGE VALUES

	Note	*Min.*	*Max.*	
1. Heater Current	1	6.9	8.3	amp
2. Direct Interelectrode Capacitances:				
Grid No.1 to plate	2	-	0.11	pf
Grid No.1 to cathode & heater	2	26	32	pf
Plate to cathode & heater	2	-	0.011	pf
Grid No.1 to grid No.2	2	34	41	pf
Grid No.2 to plate	2	4.3	6.3	pf
Grid No.2 to cathode & heater	2	-	1.1	pf
3. Reverse Grid-No.1 Current	1,3	-	-50	μa
4. Peak Emission	1,4	80	-	amp
5. Interelectrode Leakage Resistance	5	8.0	-	megohms
6. Cutoff Grid-No.1 Voltage	1,6	-	-87	volts

Note 1: With 6.3 volts, ac or dc on heater.

Note 2: Measured with special shield adapter.

Note 3: With dc plate voltage of 2500 volts, dc grid-No.2 voltage of 400 volts, and dc grid-No.1 voltage adjusted to give a plate current of 240 ma.

Note 4: For conditions with grid No.1, grid No.2, and plate tied together; and pulse voltage source of 850 peak volts between plate and cathode. Pulse duration is 2 microseconds, pulse repetition frequency is 60 pps, and duty factor is 0.00012. Peak emission current is read after 1 minute.

Note 5: Under conditions with tube at 20° to 30° C for at least 30 minutes without any voltages applied to the tube. The minimum resistance between any two electrodes (except across heater terminals) is measured with a 200-volt Megger-type ohmmeter having an internal impedance of 1.0 megohm.

Note 6: With dc plate voltage of 2500 volts, dc grid-No.2 voltage of 400 volts, and dc grid-No.1 voltage adjusted to give a plate current of 5 ma.

SPECIAL TESTS AND PERFORMANCE DATA

The environmental conditions shown for the tests below are those applied directly to the tube. Extreme care must be used in the design of the mountings to minimize mounting resonances.

50g, 11-Millisecond Shock Test:

This test is performed on samples of tubes to determine the ability of the tube to withstand the specified long-duration impact acceleration. Tubes are held rigid in six different positions in a medium impact shock machine and are subjected to three blows in each position.

At the end of this test, tubes will not show permanent or temporary shorts or open circuits.

500g, Nominal 3/4-Millisecond Shock Test:

This test is performed on samples of tubes to determine the ability of the tube to withstand the specified impact acceleration. Tubes are held rigid in four different positions in a high-impact shock machine and are subjected to five blows in each position.

At the end of this test, tubes will not show permanent or temporary shorts or open circuits.

5-2000 cps Variable Frequency Vibration Test:

This test is performed on samples of tubes to determine the ability of the tube to withstand variable frequency vibration. With heater voltage of 6.3 volts ac or dc, dc plate supply voltage of 300 volts, dc grid-No. 2 voltage of 250 volts, grid-No. 1 voltage adjusted to give dc plate current of 10 ma, and plate load resistor of 2000 ohms. This tube is vibrated along each of three mutually perpendicular axes over an 8-minute sweep consisting of:

a. 5-10 cps with fixed double amplitude of 0.080 inch ± 10%.
b. 10-15 cps at fixed acceleration of 0.41g ± 10%.
c. 15-105 cps with fixed double amplitude of 0.036 inch ± 10%.
d. 105-2000 cps at fixed acceleration of 20g ± 10%.

At the end of this test, tubes will not show permanent or temporary shorts or open circuits.

DIMENSIONAL OUTLINE

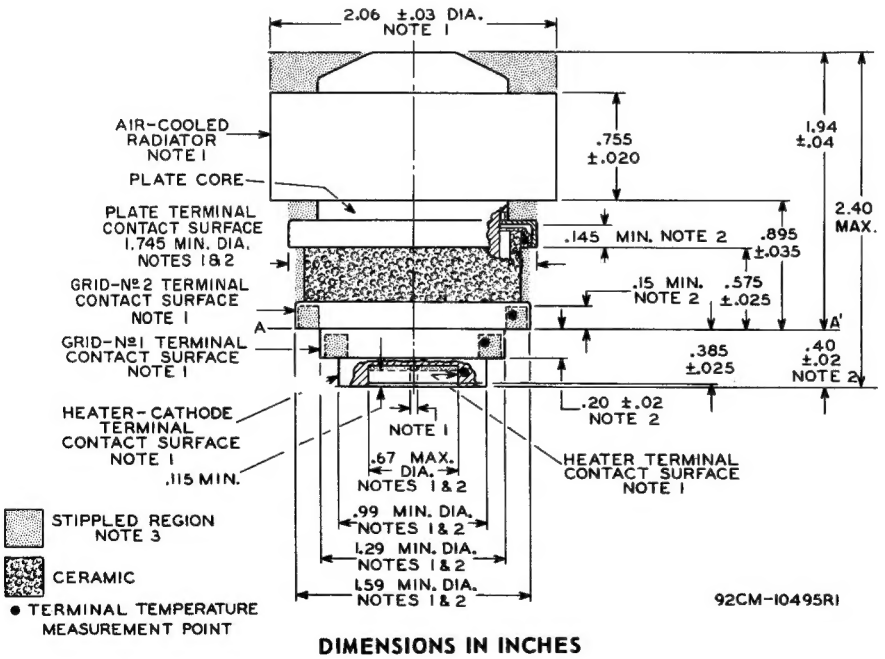

DIMENSIONS IN INCHES

TERMINAL DIAGRAM

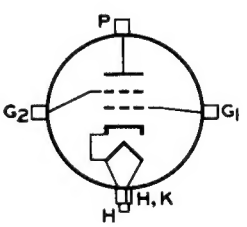

NOTE 1: THE FOLLOWING DIAMETRICAL SPACE REQUIREMENTS ACCOMMODATE THE CONCENTRICITY OF THE CYLINDRICAL SURFACES OF THE RADIATOR BAND AND EACH ELECTRODE TERMINAL:

a. Radiator Band - 2.112"
b. Plate Terminal - 1.801"
c. Grid-No. 2 Terminal - 1.611"
d. Grid-No. 1 Terminal - 1.321"
e. Heater-Cathode Terminal - 1.021"
f. Heater Terminal - 0.621"

NOTE 2: THE DIAMETER OF EACH TERMINAL IS HELD TO INDICATED VALUES ONLY OVER THE INDICATED MINIMUM LENGTH OF ITS CONTACT SURFACE.

NOTE 3: KEEP ALL STIPPLED REGIONS CLEAR. DO NOT ALLOW CONTACTS OR CIRCUIT COMPONENTS TO PROTRUDE INTO THESE ANNULAR VOLUMES. DIAMETERS OF STIPPLED AREAS ABOVE AIR-COOLED RADIATOR, PLATE TERMINAL CONTACT SURFACE, AND GRID-No. 2 TERMINAL CONTACT SURFACE SHALL NOT BE GREATER THAN ITS ASSOCIATED DIAMETER.

TUNING CHARACTERISTICS

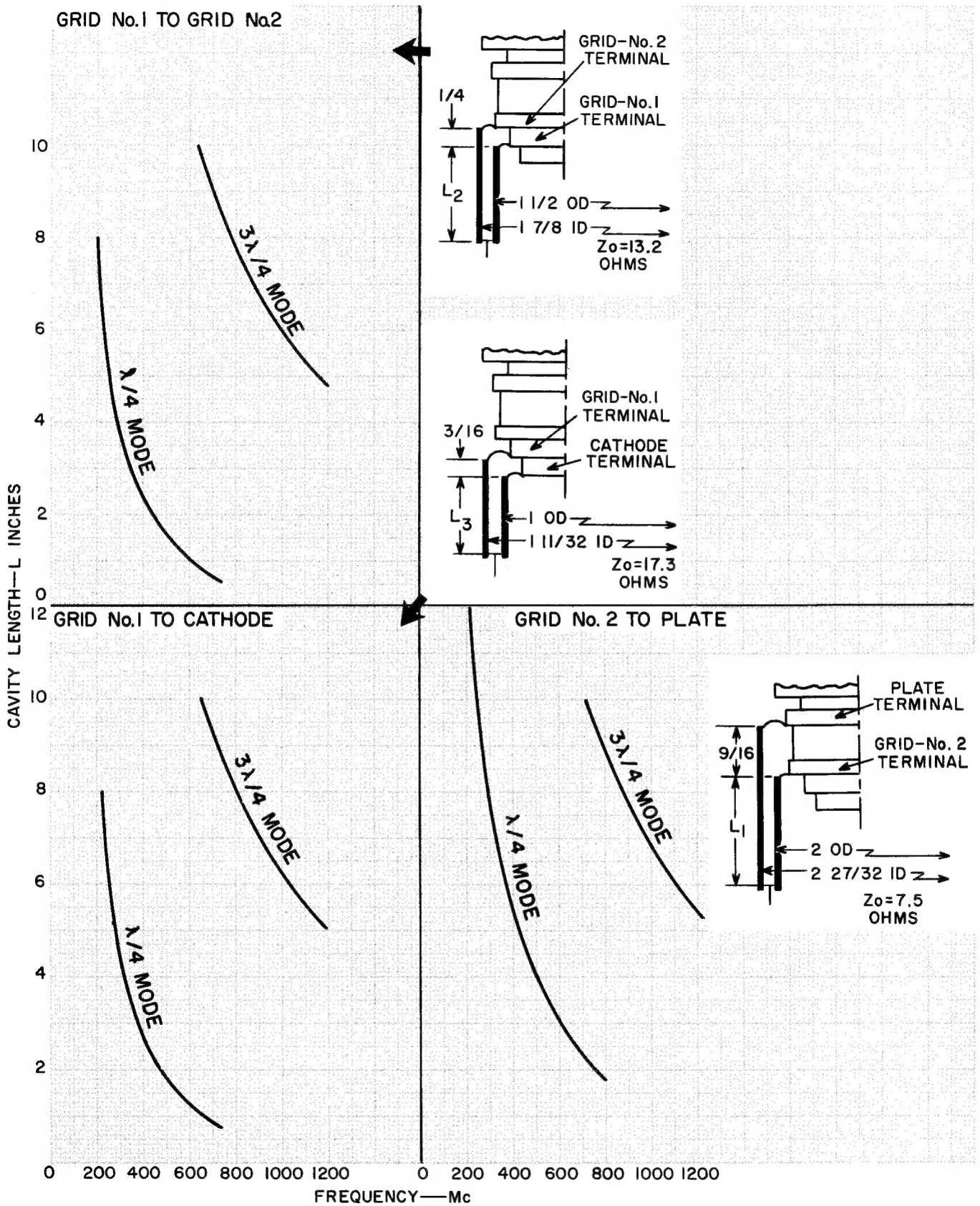

92CM-12637

TYPICAL CONSTANT-CURRENT CHARACTERISTICS
For Grid-No.2 Voltage = 400 Volts

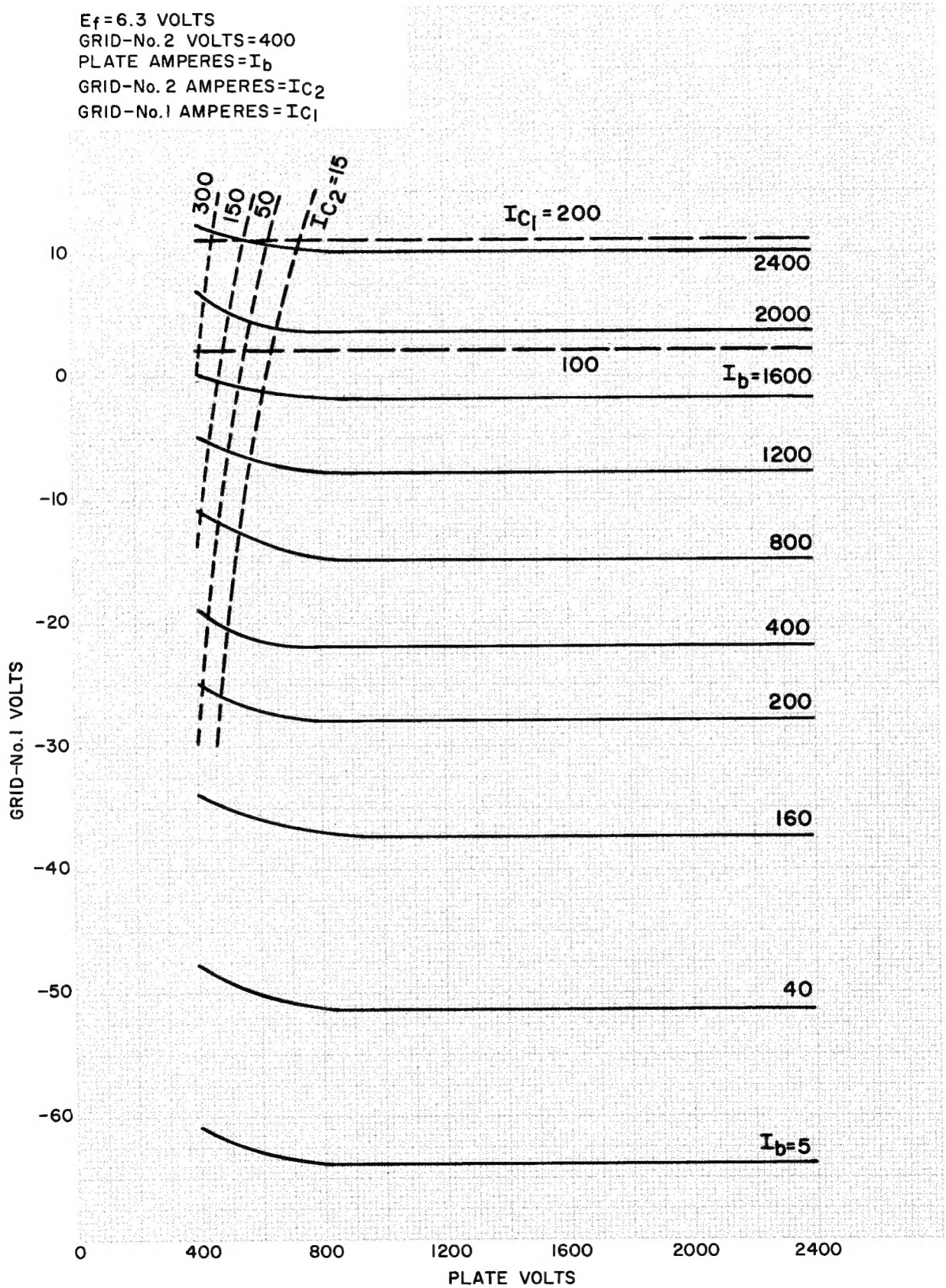

92CM-12630

TYPICAL CONSTANT-CURRENT CHARACTERISTICS
For Grid-No.2 Voltage = 300 Volts

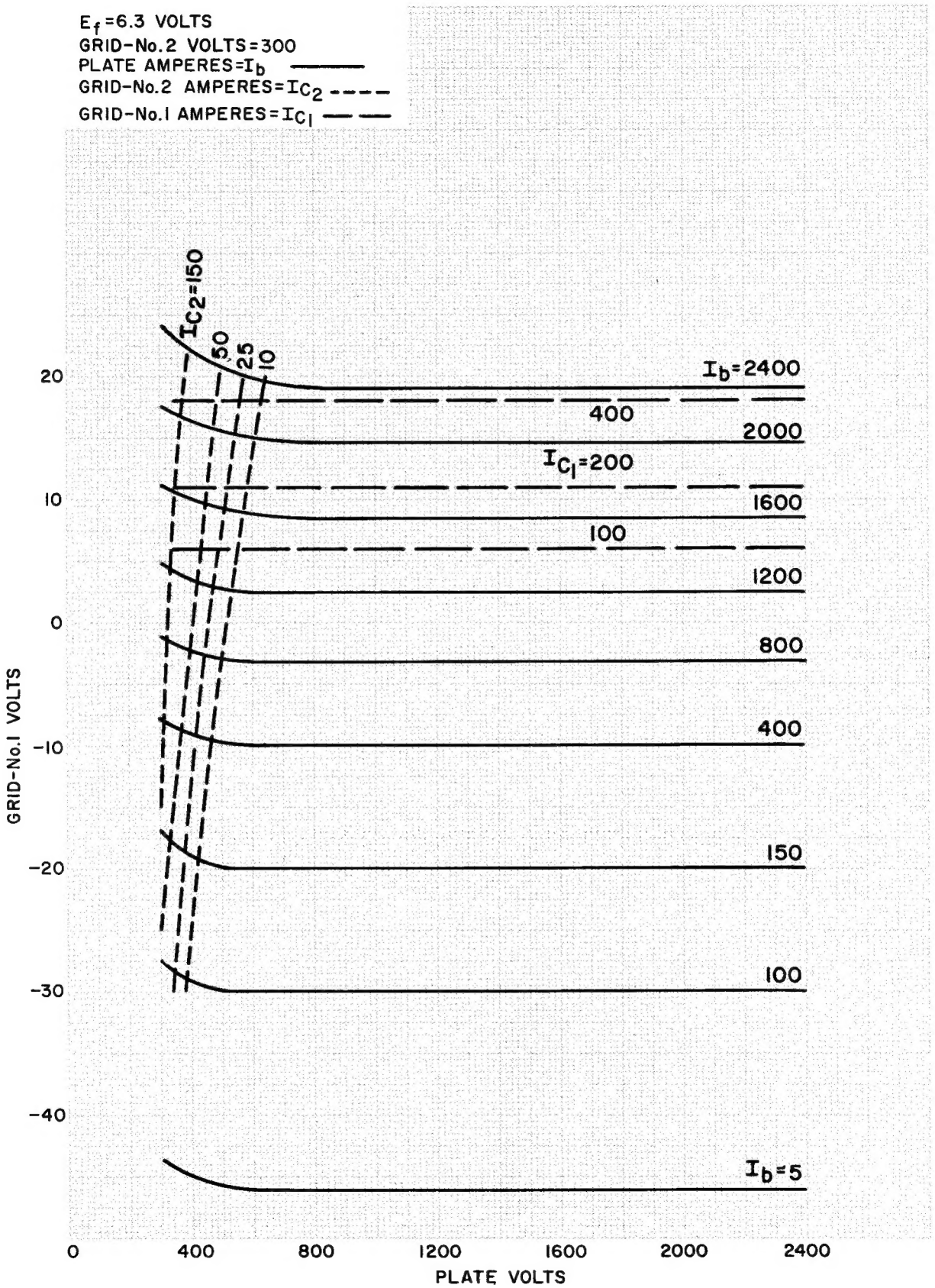

92CM-12627

FORCED-AIR COOLING

Air Flow:

Through radiator — Adequate air flow to limit the plate core temperature to 250° C should be delivered by a blower, such as Rotron* AS-301, AXIMAX 1, or equivalent, through the radiator before and during the application of heater, plate, grid-No.2, and grid-No.1 voltages.

Typical values of air flow directed through the radiator to maintain the plate core (See *Dimensional Outline*) at 250° C with an incoming air temperature of 25° C and with no restrictions at the plate contact flange are:

Plate Dissipation (watts)	Air Flow (cubic ft/min)	Static Pressure (inches of water)
100	2	0.04
300	4	0.14
600	11	0.66
700	16	0.96

To Plate, Grid-No.2, Grid-No.1, Heater-Cathode, and Heater Terminals — A sufficient quantity of air should be allowed to flow past each of these terminals so that their temperature does not exceed the specified maximum value of 250° C. An air flow of 2.5 cfm is usually adequate.

During Standby Operation — Cooling air is required to the Heater-Cathode and Heater Terminals when only heater voltage is applied to the tube.

During Shutdown Operation — Air flow should continue for a few minutes after all electrode power is removed.

* Rotron Mfg. Co., Inc., Woodstock, N. Y.

Mounting

See the preferred mounting arrangement below. See section III.C.3.a of ICE-300 for a description of the fixed method of mounting. The adjustable method is not recommended for the 7650.

PREFERRED MOUNTING ARRANGEMENT
and Layout of Associated Contacts

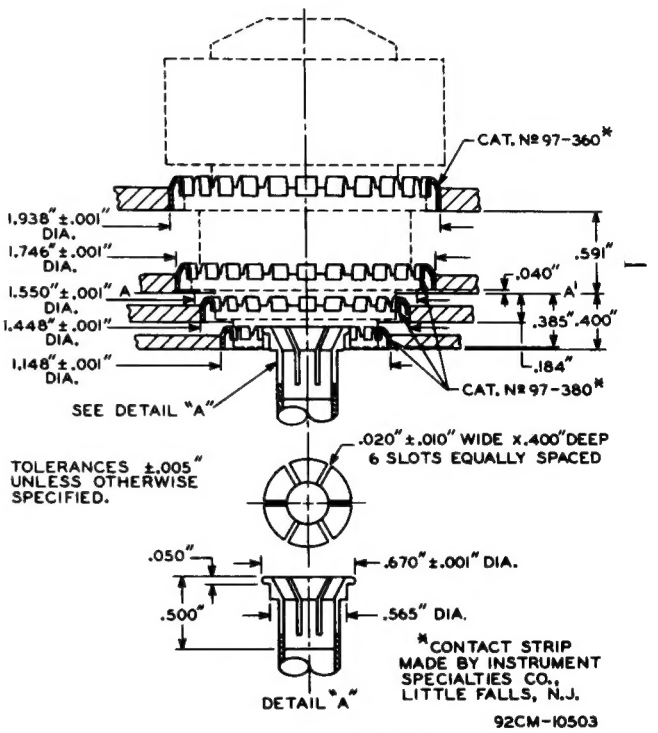

DIMENSIONS IN INCHES